COD: 30S12/24.D.2018

Installation, use and maintenance manual

SMART 30

Digital 12/24 V dc

Schenker Italia
Via Ferrante Imparato 501 - Condominio Genesis
80146 Naples (Italy)
Tel. +39 081 5593505
Fax. +39 081 5597372
E-mail: info@schenker.it
www.schenkerwatermakers.com

THE PRESENT MANUAL BELONGS TO - **Schenker Italia** - ALL RIGHTS RESERVED

INDEX

1. LAYOUT OF MANUAL 4
1.1 STRUCTURE OF THE MANUAL 4
1.2 DESCRIPTION OF THE PICTOGRAMS 4
2. GENERAL WARNINGS AND INFORMATION TO THE RECIPIENT 5
2.1 IMPORTANT INFORMATION 5
2.2 SAFETY WARNINGS 5
2.3 WARRANTY 6
2.4 IDENTIFICATION OF THE UNIT 7
2.5 LEGISLATIVE REFERENCE 7
2.5.1 DIRECTIVES AND STANDARDS CONCERNING MACHINE SAFETY 7
2.5.2 RESPECT FOR THE ENVIRONMENT – REQUIREMENTS FOR REMOVAL AND DISPOSAL 7
3. PRODUCT PRESENTATION 9
3.1 TRANSPORT AND MATERIAL HANDLING 9
3.2 STOCK 10
3.3 PACKAGING 10
3.3.1 PACKAGING CONTENTS 10
3.4 ATTACHED DOCUMENTS 11
3.5 TECHNICAL DATA 11
3.6 FEATURES OF THE PRODUCT 12
3.7 ADVANTAGES OF THE ENERGY RECOVERY SYSTEM 13
3.8 COMPOSITION OF THE MACHINE 14
3.8.1 PUMP GROUP 14
3.8.2 WATERMAKER GROUP 15
3.8.3 ACCESSORIES 19
4. MOUNTING AND INSTALLATION 20
4.1 GENERAL CRITERIA 20
4.2 COMPONENTS MOUNTINGS 21
4.2.1 PUMP GROUP 21
4.2.2 WATERMAKER GROUP 21
4.2.3 ACCESSORIES 21
4.3 INSTALLATION 21
4.3.1 WATER INTAKES AND DISCHARGES 21
4.3.2 SEAWATER INTAKE 22
4.3.3 FRESH WATER INTAKE FOR WASHING 23
4.3.4 BRINE DISCHARGE 23
4.4 HYDRAULIC CONNECTIONS 24
4.5 ELECTRIC CONNECTIONS 27
4.5.1 REMOTE CONTROL PANEL MOUNTING 27
4.5.2 ELECTRIC CONNECTIONS: WIRES (SMART 30 12/24V DC) 28
4.5.3 ELECTRIC LAYOUT SCHEME (12/24V DC) 30
5. FUNCTIONING AND USE 31
5.1 COMMAND DESCRIPTION 31
5.2 INTRODUCTION – BY PASS MODE 34
5.3 FIRST START-UP PROCEDURE 34
5.3.1 PRELIMINARY CHECKS BEFORE PROCEEDING WITH THE START-UP PROCEDURE 34
5.3.2 START-UP 35

THE PRESENT MANUAL BELONGS TO - **Schenker Italia** - ALL RIGHTS RESERVED

5.4 NORMAL OPERATING PROCEDURE 36
5.4.1 NORMAL OPERATING PROCEDURE WITH FINAL FLUSHING (RECOMMENDED) 36
5.4.2 NORMAL OPERATING PROCEDURE WITH TIMER AND FINAL FLUSHING 36
5.4.3 SINGLE WASHING OPERATION 37
5.4.4 PERIODIC WASHING 37
5.5 RESET PROCEDURE 38
6. MAINTENANCE (ROUTINE AND SPECIAL) 40
6.1 CHECK FILTER CLEANLINESS 40
6.2 CHECK THE PLANT WORKING PRESSURE 41
6.3 CHECK FOR LEAKS 41
6.4 CHECK FOR MEMBRANES REPLACEMENT 41
6.5 SHUTDOWN PROCEDURE 41
6.5.1 NECESSARY EQUIPMENT 42
6.5.2 SHUTDOWN OPERATING PROCEDURE 43
6.6 ANTIFREEZE PROCEDURE (WINTERIZING PROCEDURE IN COLD CLIMATE - UNDER 5°C) 45
6.7 PERIODIC MAINTENANCE 46
6.7.1 MEMBRANE REPLACEMENT 46
6.8 ADJUSTMENTS 46
7. TROUBLESHOOTING 47
7.1 TROUBLESHOOTING CHART 47
7.2 ELECTRONIC ISSUES AND THEIR SOLUTION 48
8. SUGGESTED SPARE PARTS 49
8.1 SHORT TERM CRUISING 49
8.2 LONG TERM CRUISING 49
8.3 ERS SPARE PARTS 50
8.4 ADDITIONAL SPARES 51

THE PRESENT MANUAL BELONGS TO - **Schenker Italia** - ALL RIGHTS RESERVED

1. LAYOUT OF MANUAL

1.1 Structure of the manual

The manual is divided into chapters, which gather all the information necessary to use the system without risk. Within each chapter there is a subdivision in paragraphs to focus on essential points; each paragraph can be pointed out with a subtitle and a description.
At the top of each page the heading section is reported in order to remind the reader the field of the page.

Within the chapter, for example chapter 1, we will have:

1	Chapter title
1.1	Paragraph title
1.1.1	Subtitle
1.1.1.1	Further subtitles

The numbering of the pages, figures and tables, is reset to each chapter; therefore, we will find the prefix indicating the chapter and the page number, figure or table in progressive that starts from number 1 at the beginning of each chapter.

1.2 Description of the pictograms

The following symbols will be used in the manual to highlight particularly important indications and warnings:

ATTENTION:
This symbol indicates accident prevention regulations for the operator and / or for any exposed persons.

CAUTION:
This symbol indicates that there is the possibility of damaging the system and / or its components.

NOTE:
This symbol indicates useful information.

THE PRESENT MANUAL BELONGS TO - **Schenker Italia** - ALL RIGHTS RESERVED

2. GENERAL WARNINGS AND INFORMATION TO THE RECIPIENT

2.1 Important information

To safeguard the operator's safety and to avoid possible damage to the machine, before carrying out any operation on the machine, it is essential to read carefully all the instructions manual.

This manual must be complete and legible in its entirety, every operator involved in the use of the machine, or responsible for maintenance or adjustment operations, must know its location and must have the possibility to consult it at any time.

All rights of reproduction of this manual are reserved to SCHENKER ITALIA. This manual cannot be transferred to third parties without the written authorization of SCHENKER ITALIA.

The text cannot be used in other printed matter without the written permission of SCHENKER ITALIA.

The descriptions and illustrations provided in this publication are not binding.

SCHENKER ITALIA reserves the right to make any modifications it deems appropriate.

© SCHENKER ITALIA

THIS MANUAL IS PROPERTY OF SCHENKER ITALIA, ANY REPRODUCTION, EVEN PARTIAL, IS PROHIBITED.

This manual was drafted according to the requirements of the 2006/42 / EC Machinery Directive.

2.2 Safety warnings

- Wear protective equipment suitable for service operation.
- Clothing must be tight to the body, and resistant to the products used for cleaning.
- Do not remove safety devices or accident prevention protection.
- To check if the plant is correctly installed contact a Schenker service point.
- Verify that the electric and hydraulic connections are in keeping with the indicated specifications.
- Avoid using the plant if the sea water is polluted.
- Children and inexperienced people shall not touch or operate the plant.
- Check periodically that no leaks are present. Avoid installing the plant where a leak may cause damage and/or jeopardize the safety of the vessel.
- Maintenance should only be carried out by suitably qualified persons or Schenker personnel.

ATTENTION

Any technical changes or operating conditions indicated that affect the correct operation or safety of the machine must only be carried out by the manufacturer's technical staff or by technicians formally authorized by the manufacturer. Otherwise, SCHENKER ITALIA declines any responsibility for changes or damages that may result from it.

2.3 Warranty

The equipment and the relevant accessories are guaranteed 12 months from delivery. The guarantee does not include consumable items (filters, carbon filters, membranes, etc.). The “ERS” pressure amplification device is guaranteed 36 months, provided that the annual maintenance is per-formed at a Schenker service point.
The guarantee covers faults, defect of materials and parts. It is limited to the replacement or re-pair of faulty parts. The expense for the disconnecting and reinstalling on the vessel and transport of the equipment from or to our Service Point, or our factory will be at the customers own expense.
The under guarantee delivered parts transport, will be at customer’s own risk.
In case of repairs under guarantee performed by our technicians on the customer vessel, the faulty parts replacement cost will be at Schenker's expense, while manpower and travel expenses will be charged to the customer. The guarantee does not include faults caused by negligence in operating, maintenance and installation of the device (if not carried out by an authorised Schenker Service point).
Dismantling by non-authorized personnel will render void all guarantees. Schenker Italia cannot be held liable for any direct or indirect damage caused by the malfunctioning equipment, limiting its responsibility to the repair and replacement of faulty parts.

ATTENTION

SCHENKER ITALIA declines any responsibility for improper use of the machine, for damages caused as a result of operations not covered by this manual or unreasonable use.

THE PRESENT MANUAL BELONGS TO - **Schenker Italia** - ALL RIGHTS RESERVED

2.4 Identification of the unit

All the watermakers manufactured by Schenker Italia can be identified by a serial number printed on a label which is pasted upon the aluminium frame near the manometer. The same serial number is also recorded on the central black block of the energy recovery system (ERS).

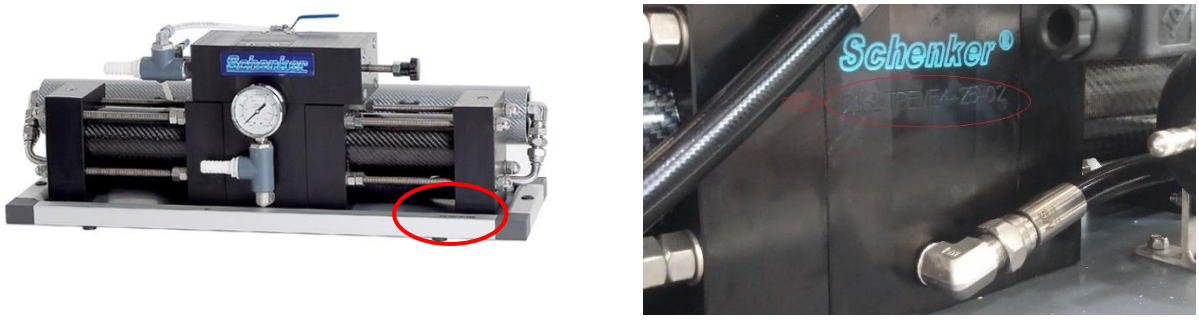

Serial number
Fig. 2-1

2.5 Legislative reference

2.5.1 Directives and standards concerning machine safety

- Machinery Directive 2006/42 / EC, in force since December 29, 2009;
- Low Voltage Directive 73/23 / EEC and subsequent amendments and additions: 93/68 / CEE implemented by the Law of 18 October 1997 n. 791.
- Electromagnetic Compatibility Directive 89/336 / EEC and subsequent amendments and additions: 93/31 / CEE implemented with D.L. December 4, 1992 n. 476.
- Standards UNI EN 292/1 and 292/2 (safety of machinery);

2.5.2 Respect for the environment – requirements for removal and disposal

ATTENTION

Removal and disposal of materials, as result of the decommissioning of the machine, must be performed in accordance with the regulations in force, for the safeguard and protection of the environment

With regard to removal and disposal, it should be noted that the materials of which the machine is made of are not of a dangerous nature and consist essentially of:

- Stainless Steel;
- Aluminium;
- Plastic;
- Carbon fibre;
- Motors, cables and consumable electrical materials;
- Rubber and polyurethane seals.

THE PRESENT MANUAL BELONGS TO - **Schenker Italia** - ALL RIGHTS RESERVED

After dismantling the machine, the various materials must be segregated according to the regulations of the country in which the machine has been removed.

The machine does not contain dangerous components or substances that require special removal procedures.

ATTENTION

Different legislations are in force in the different countries, therefore the prescriptions imposed by the laws and by the agencies designated by the Countries must be observed.

THE PRESENT MANUAL BELONGS TO - **Schenker Italia** - ALL RIGHTS RESERVED

3. PRODUCT PRESENTATION

ATTENTION

Be sure to follow general safety instructions.

- Wear protective equipment suitable for the transport and handling operations.
- Lift the machines with equipment appropriate to the weight and size of the box, taking the utmost care and following carefully the instructions on the present use and maintenance manual (attachment points for loading devices, etc.).
- Make sure that the lifting equipment used is in good condition and correctly maintained.
- Do not stand or pass under the groups to be moved during lifting or transport operation.

3.1 Transport and material handling

The watermaker unit is transported in a cardboard box. In the following table dimension and weight are indicated.

MATERIALS HANDLING
fig. 3-1

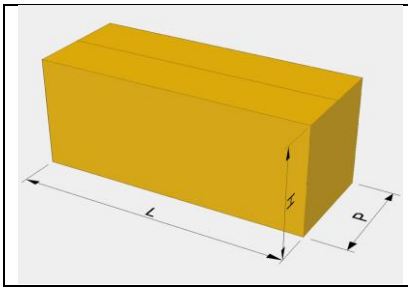

Model	L cm.	W cm.	H cm.	Weight Kg.
Smart 30	82	57	48	37

Packaging dimensions and weight
tab.3-1

THE PRESENT MANUAL BELONGS TO - **Schenker Italia** - ALL RIGHTS RESERVED

3.2 Stock

ATTENTION

To avoid undesirable damages to the system be aware to stock the unit in a dry place with temperature between 5 and 40 °C. Coldest temperature could led to a freeze of the fluid inside the system with the consequence of a permanent fault of the system.

3.3 Packaging

3.3.1 Packaging contents

PACKAGING
FIG. 3-2

Smart 30	
Watermaker	Pump group
Active carbon filter with electrovalve	White filter key
Mesh filter	Non-return valve with Tee fitting
Remote panel with electric box	10 mt extension cable for remote panel
Intallation kit	Small metal parts
6x8 hose for production	Hose fittings

THE PRESENT MANUAL BELONGS TO - **Schenker Italia** - ALL RIGHTS RESERVED

3.4 Attached documents

The packaging contains the technical documentation (use and maintenance manual, electric and hydraulic scheme, warnings and instructions).

ATTENTION

- Lift the system only using the aluminium structure and not trough the Inox SS fittings.
- Read carefully the use and maintenance manual before installing the system.
- Use only recommended material for the installation (especially hoses, fittings and seals) in accordance with the present manual.
- Do not store the unit under temperature of 5°C and above 40°C.

DOCUMENTS INCLUDED IN THE PACKAGING
FIG. 3-3

3.5 Technical data

WATERMAKER GROUP

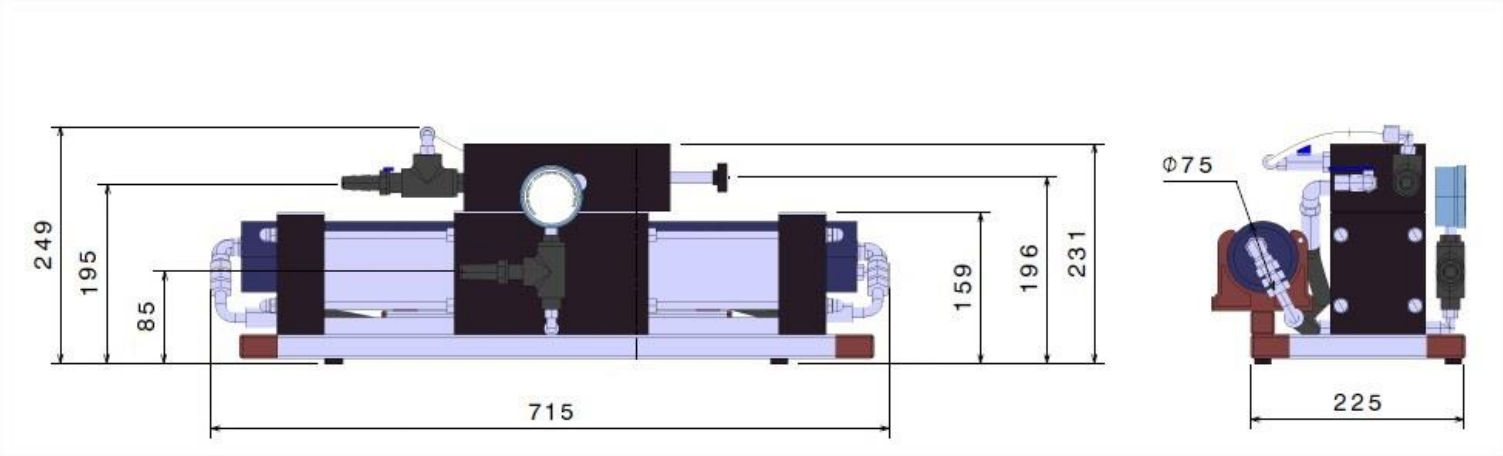

WATERMAKER DIMENSIONS
FIG. 3-4

Weight:	18 Kg
Hydraulic Connection	
Seawater inlet:	¾'' fitting, 16mm internal diameter reinforced hose.
Exhaust:	½'' fitting, 16mm internal diameter reinforced hose.
Fresh water:	¼'' fitting, 6x8mm hose.

THE PRESENT MANUAL BELONGS TO - **Schenker Italia** - ALL RIGHTS RESERVED

PUMP GROUP

Dimensions

Length:	34 cm
Width:	20 cm
Height:	20 cm
Weight:	7 Kg

Hydraulic Connection

Water inlet:	¾'' fitting, 16mm internal diameter reinforced hose.
Water outlet:	¾'' fitting, 16mm internal diameter reinforced hose.

Feed pump type:	Shurflo diaphragm pump
Filters:	n. 1 Cartridge filter 5 microns 2.32" x 9 ¾'' n. 1 Active carbon filter 2.32" x 9 ¾''
Power supply: .	12 VDC +/- 15% (30S12 version) 24 VDC +/- 15% (30S24 version)
Average electric consumption:	110 Watt/h average
Peak electric consumption:	200 Watt
Nominal fresh water production:	35 Lit/h +/- 20% @ seawater 25 °C salinity 35.000 ppm
Fresh water quality:	Under 500 ppm TDS average
CEE conformity:	In compliance with directives 89/392 CEE sect.1 (general safety machines requirements), 89/336 CEE (electromagnetic compatibility), 73/23 CEE (electric safety requirements)

3.6 Features of the product

The water produced by a Schenker plant, produced from clean seawater has a purity of between 350 & 450 parts per million Totally dissolved solids (TDS/PPM), but the potability may not be guaranteed as bacterium may be present in the watermaker, caused by non-observance of shutdown and cleaning procedures. It is essential that correct shut down and storage procedures are followed to ensure continued purity of the product water. UV treatment of the product water may be beneficial.
.

THE PRESENT MANUAL BELONGS TO - **Schenker Italia** - ALL RIGHTS RESERVED

3.7 Advantages of the Energy recovery system

Introduction

Thank you for choosing a Schenker Watermaker.
As all the equipment, the knowledge of operating and maintenance procedures allows to use the system in the best way, and to guarantee a perfect functioning throughout the years. We invite you to read carefully this manual and to keep it for a quick reference.

Functioning principles

The Schenker watermakers, as alternative to the high-pressure pumps of traditional systems, utilizes the ENERGY RECOVERY SYSTEM patented device, which amplifies the pressure of common low-pressure pumps, and recoup all the hydraulic energy back from the membranes, allowing a high energy efficiency.
The lack of high-pressure pumps makes the system silent and vibrations free, and enormously simplifies the use because no adjustment is necessary for its operating.

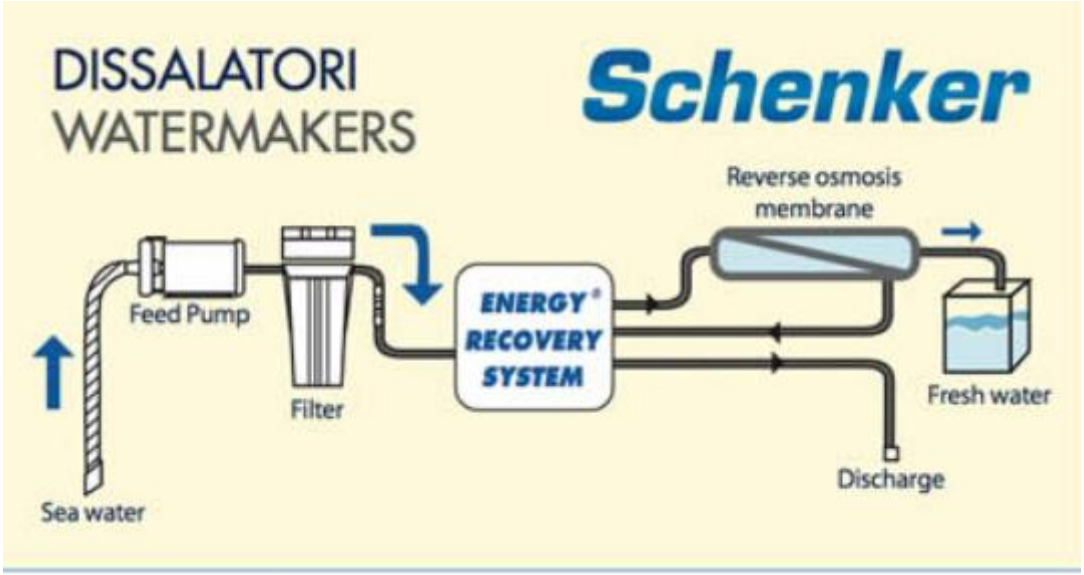

FUNCTIONING SCHEME
FIG. 3-5

3.8 Composition of the machine

The machine is composed of the following parts:

1. PUMP GROUP
2. WATERMAKER GROUP

3.8.1 Pump group

This pump has the duty of picking the sea water up and send it to the watermaker group, through the pre filter. The pump group is composed of the following parts:

- 5 micron cartridge filter
- Diaphragm pump
- High pressure switch
- Pump box
- Accumulator

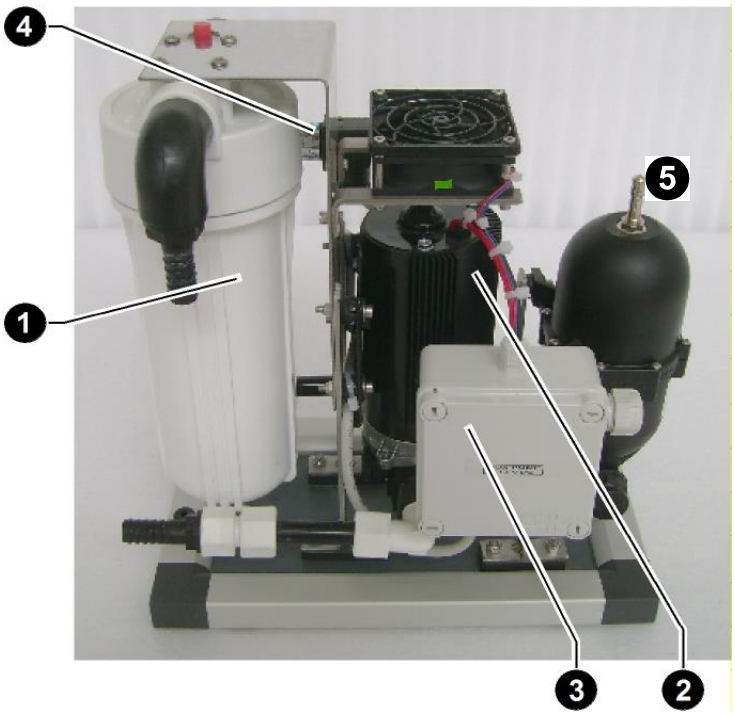

PUMP GROUP AND FILTER 12-24 V DC
FIG. 3-6

1. 5 micron cartridge filter
2. Diaphragm pump
3. Pump box with relays
4. High pressure switch
5. Accumulator

3.8.2 Watermaker group

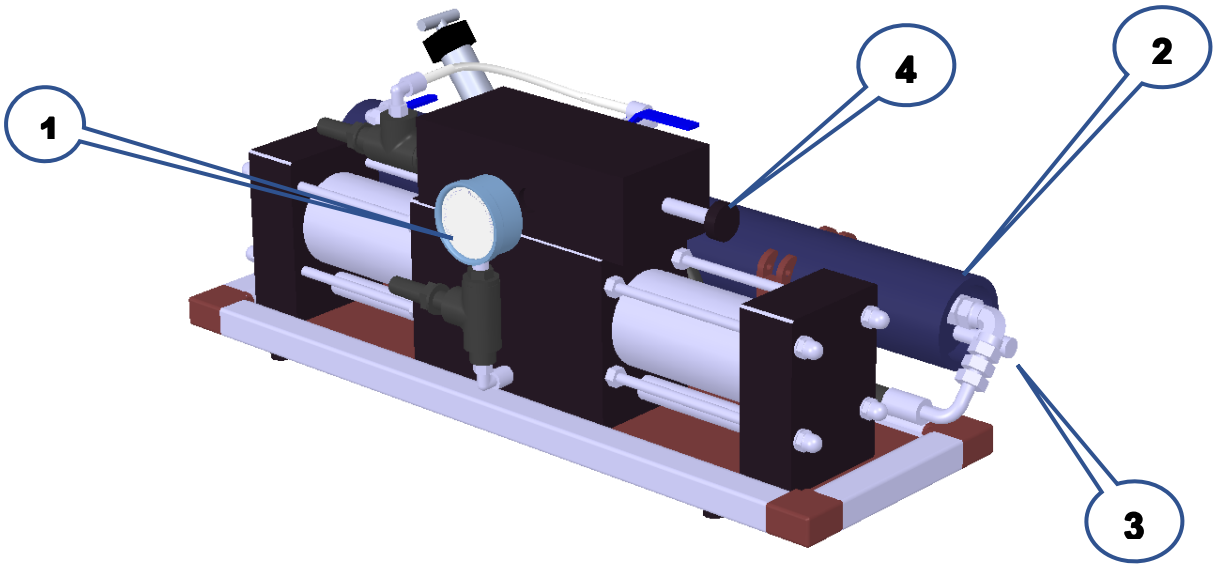

WATERMAKER GROUP
FIG. 3-7

1. Manometer
2. Reverse osmosis membrane
3. Fresh water production hose
4. Positioner knob

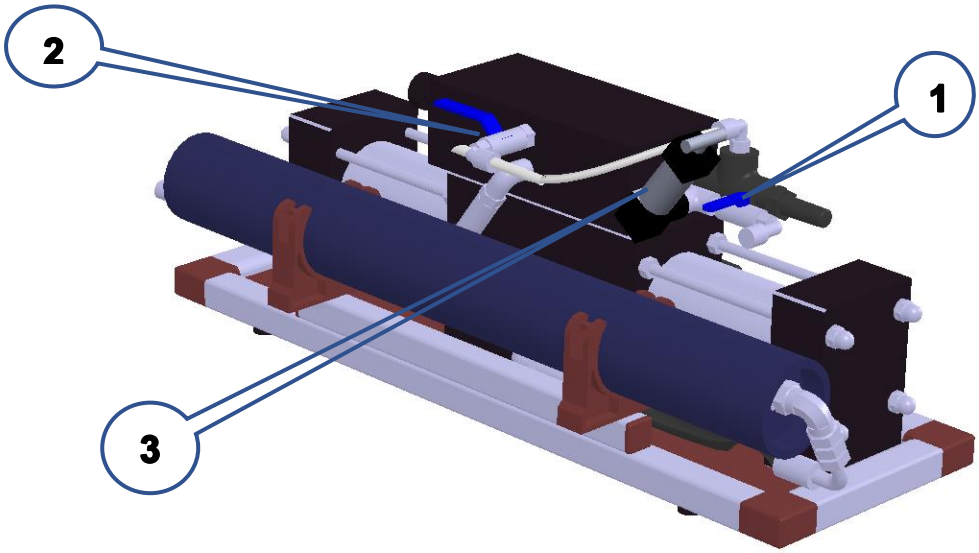

WATERMAKER GROUP (BACK VIEW)
FIG. 3-8

1. Reset valve
2. Depressurization valve
3. Signal pressure switch
4. Fresh water production hose

THE PRESENT MANUAL BELONGS TO - **Schenker Italia** - ALL RIGHTS RESERVED

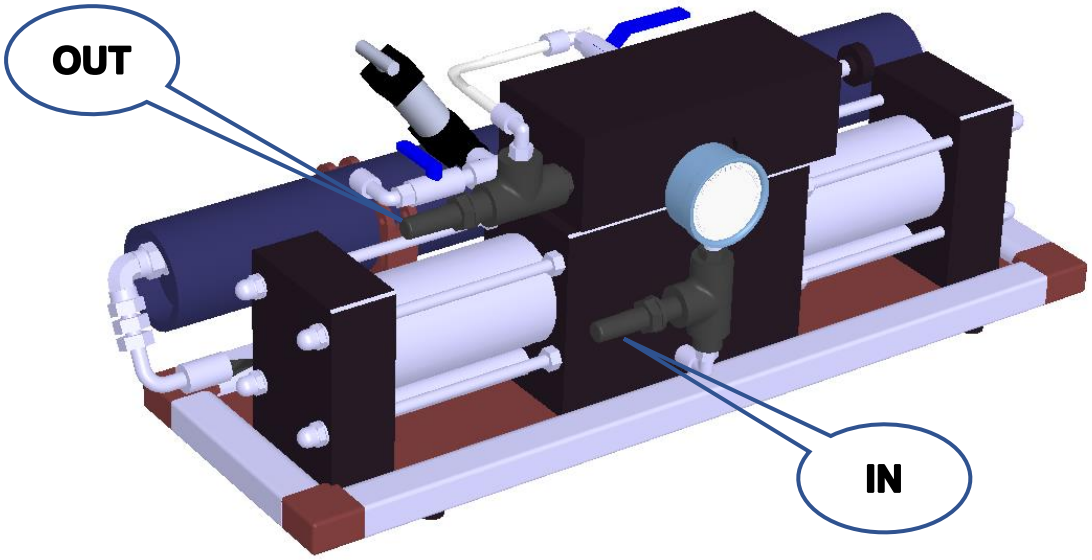

CONCENTRATE OUTLET (OUT) AND SEAWATER INLET (IN)
FIG. 3-9

The watermaker group is composed of the following parts:

- Reverse osmosis membrane
- Energy Recovery System
- Manometer
- Depressurization valve
- Positioner
- Reset valve
- Probe (pressure switch)
- Electric box

Reverse osmosis membrane. It is installed inside the glass fibre high-pressure housing. Membrane is n.1 x SW2521 type. Its purpose is to separate the intake high-pressure seawater in two flows: one for the salt-water drain and one for the fresh water production.

Energy Recovery System It is the black, carbon fibre unit. It has the function to amplify the pressure supplied by the pumps and to recoup the hydraulic energy back from the membranes. The ERS device makes periodic cycling by a hydraulically controlled automatic valve. The cycles are noticeable through a ”beat” issued periodically by the watermaker unit. The unit is based on cylinders and a central body containing the hydraulic valve necessary for the system functioning.

Manometer. It is located on the front panel of the watermaker, and it measures the working pressure of the watermaker.

Accumulator. It is a black plastic reservoir of air, installed in the pump group. Its function is to reduce and stabilize the pressure peaks during the watermaker functioning. The device has to be pre-charged with air through the specific valve. The air pressure precharge is about 4 Bar. The pressure dimmer is charged in factory at the right pressure.

THE PRESENT MANUAL BELONGS TO - Schenker Italia - ALL RIGHTS RESERVED

Depressurization valve. It is used for the air bleeding of the unit. It is recognizable by a blue lever and it is located on the top side of the watermaker fitted on the top valve of the ERS. Its function is to depressurize the system and to allow the bleeding of air. The valve must be closed during normal working conditions (vertical position), and it is opened during the air bleeding operations (horizontal position).

Positioner. It is a stainless steel threaded arm, with a black knob, located on the right side of the watermaker. Its function is to reset the unit in case of hydraulic block.

Reset valve. It is installed on top of the ERS it is recognizable by the little blue plastic lever. The valve must be closed during normal functioning (lever perpendicular to the valve). Such valve has the function to allow the reset of the ERS in case of a system block. It must be opened before acting on the valve positioner.

High pressure switch. It Is hydraulically connected with the pump group. It stops the system if the pump pressure exceeds 9,5 bar. In this case a high-pressure alarm is activated on the control panel.

Probe (pressure switch). It is a device, hydraulically connected to the left side on the main valve of the Energy Recovery System. Its function is check that the cycling of the machine is correct. It is set at 1,3 bar.

Computer box. It is an external unit. It has to be installed relatively close to the watermaker, in a position protected from water. It is connected to the remote panel and controls the functions of the watermaker automatically.
The microswitches P1and EV allow the direct command of the pump the electrovalve respectively. They can be used, as an emergency solution, for starting the watermaker in case of total failure of the electronic computer. In normal condition they have to be switched off.

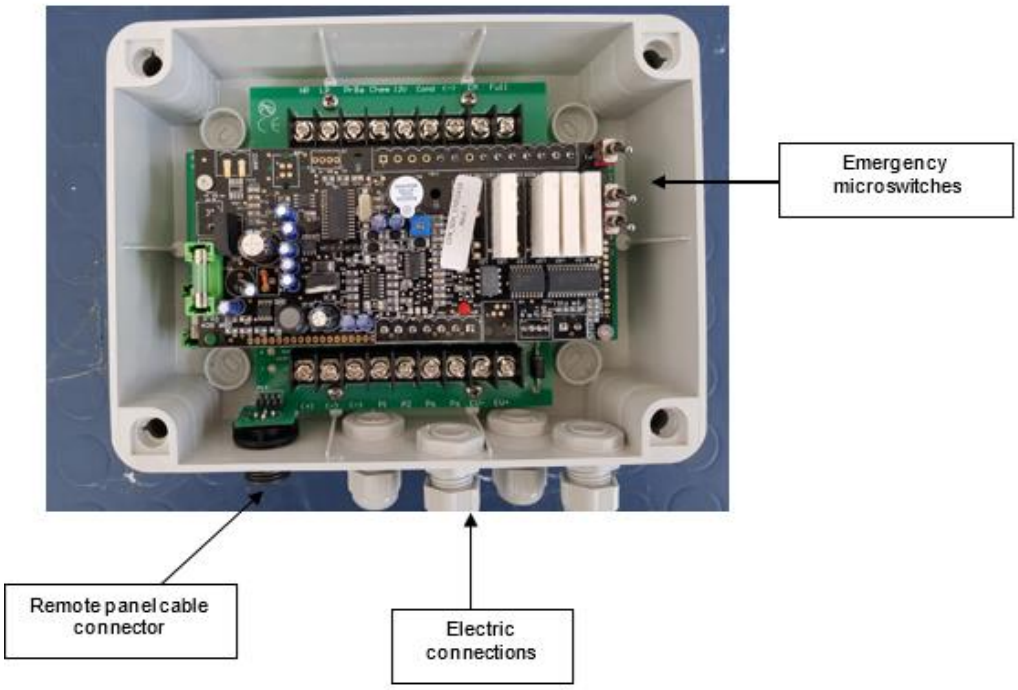

COMPUTER BOX WITH SWITCHES
FIG. 3-10

Salinity probe (optional). It checks the conductivity of the fresh water. the remote panel gives ad advice in case the fresh water quality is not good.

The 2 cables of the probe must be connected on the PCB of the electric box, clamps **Cond** and **(-).**

SALINITY PROBE CONNECTIONS
FIG. 3-11

THE PRESENT MANUAL BELONGS TO - **Schenker Italia** - ALL RIGHTS RESERVED

3.8.3 Accessories

The main accessories of the watermaker are the following:

- Active carbon filter
- Electrovalve
- Non-return valve
- Mesh filter (strainer)

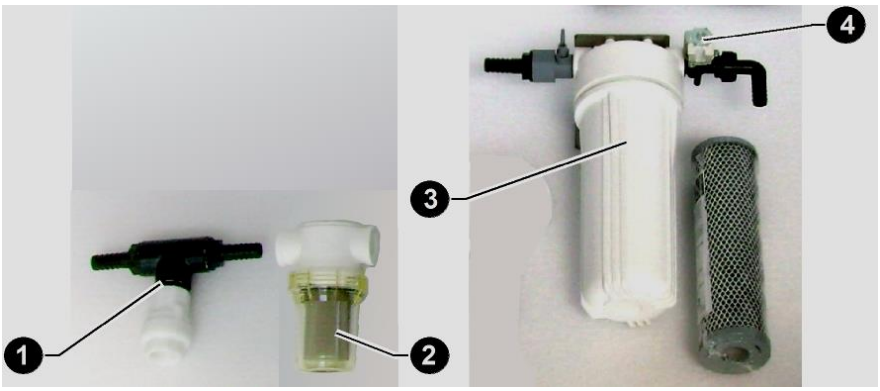

ACCESSORIES
FIG. 3-12

1 Non-return valve
2 Mesh filter (strainer)
3 Active carbon filter
4 Elettrovalve

Active carbon filter. This filter is connected between the fresh water pressurized system of the vessel and the electro valve on the filter holder. On the filter inlet is positioned a manual valve that allows to replace the cartridge without depressurize the fresh water system of the vessel.

Electrovalve. It has the function of switching from seawater intake to fresh water tank when washing the watermaker.

Non-return valve. It avoids the emptying of the inlet hoses. It must be installed vertically. It avoids also the leak of fresh water from the seacock while washing procedure.

Mesh filter: The machine is equipped with a strainer to protect the pump from macro sediments. It is placed between the seacock and pre-pump.

THE PRESENT MANUAL BELONGS TO - **Schenker Italia** - ALL RIGHTS RESERVED

4. MOUNTING AND INSTALLATION

4.1 General criteria

Before starting with the installation, it is important to carefully plan all the activities, by evaluating all the possible solution to be adopted. The main points to focus on are the following:

- Individuate the seawater inlet
- Positioning of the main units (pump group, watermaker group, active carbon filter).
- Positioning of the thermal-magnetic circuit breaker.
- Passage of the hoses and electric cables.

CAUTION
For a correct installation of the watermaker, in order to avoid issues along the different ways of operating condition, please follow carefully the general instruction below:

- ***Consider to install the through-hull fitting in a central and deep position, in the way that no air could be aspirated.***
- ***The non-return valve has to be installed under the seawater level and as close as possible to the through-hull fitting, in vertical position.***
- ***The pump must be installed as low as possible respect to the seawater level and as close as possible to the seawater intake (through-hull fitting).***
- ***The watermaker unit must be horizontally positioned, and arranged on an adequate support which is able to sustain the weight (about 25 Kg).***

CAUTION
The pump group must be installed in a ventilated place, in order to facilitate the cooling. In addition to this, a place not exposed to condensation and dripping should be adopted.

ATTENTION
The external surface of motor and pump can reach high temperature; therefore, it is recommended to avoid any contact with inflammable liquids and materials.

NOTE
Once individuate the correct installation solution, it is recommended to first make a schematic draft of the hydraulic and electric connection, and attach them to the present manual for future needs as first reference.

THE PRESENT MANUAL BELONGS TO - **Schenker Italia** - ALL RIGHTS RESERVED

4.2 Components mountings

4.2.1 Pump group

The diaphragm pump must be installed as low as possible respect to the seawater level and as close as possible to the water inlet; furthermore, the pump cannot run dry.
The pump group should be installed in an adequately ventilated room, with the purpose to facilitate the cooling of the motor, and not subject to condensation or drippings. **The max permitted room temperature must not exceed 45°C**.
Avoid the contact or the proximity with inflammable material or liquid, since the motor surfaces can reach elevated temperatures. Avoid locating the pump wherever a possible loss of water can involve damages or jeopardize its safety. The pump must be installed on a base sufficiently horizontal, suitable to sustain the weight of the group. The pump is normally fixed on the support structure by passing bolts.

4.2.2 Watermaker group

Concerning the watermaker unit installation there are not height limits respect to the seawater level. Anyway, it should be installed above the pump.
Avoid to install the system wherever any possible leak may cause damages to the vessel or jeopardize its safety, since possible leaks due to accidental causes (hose bursting, hose clamp loosening, equipment failure, etc.) may cause water losses.
The hydraulic intake and outlet connections are positioned on the left of the unit. Therefore, it is necessary to foresee a minimum distance of 20 cm. to allow the hoses laying. The watermaker unit must be installed on a base sufficiently horizontal, suitable to sustain the weight of the group. **The max allowed room temperature must not exceed 40°C**. It is advisable to install the unit in such position to make the instrumentation easily visible, and make the valves (located on the right of the unit) easily accessible. The watermaker is normally fixed on the support structure by passing bolts.

4.2.3 Accessories

The non-return valve has to be installed vertically as close as possible to the seawater intake, following the direction of the arrow.
The active carbon filter (and the attached electrovalve) has to be placed next to the pump group, if possible, on a vertical side easily accessible.

4.3 Installation

4.3.1 Water intakes and discharges

For a correct installation of the watermaker it is necessary to arrange the following water intake and discharge out of the board:

- Seawater intake.
- Fresh water intake for washing.
- Brine discharge.

THE PRESENT MANUAL BELONGS TO - **Schenker Italia** - ALL RIGHTS RESERVED

4.3.2 Seawater intake

Seacock with through-hull fitting	It is ideal a specific sea water intake, size ¾'' minimum in a central position, well under the water surface even when the vessel is well heeled over. The skin fitting is recommended. It must be oriented to the bow of the vessel. In case of high speed vessel (over 15 knot) it is advised to make some holes on the backside of the shape, in order to reduce dynamic prevalence during navigation.	Size 3/4"
Pre-existing seacock adapting (alternatively)	As alternative, it is possible Tee into a pre-existent water inlet as long as the following conditions are met: • 3/4'' minimum size**;** • No air can be introduced into the system from other use ie: salt water taps in galley; • Must always be under the water surface even when the vessel is well heeled over. • Must be far from WC discharge. ***CAUTION*** ***Do not use the pre-existing water inlet of the cooling system dedicated to the motor.***	Size 3/4" 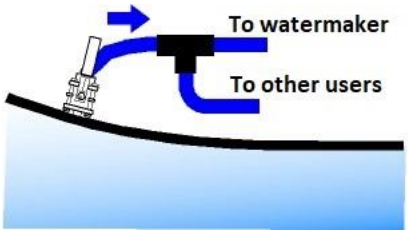

INSTALLATION NOTES

- Allow a minimum 3/4" on-off ball valve on the water intake.
- The hose connections, especially if under the seawater level, must be secured with double hose clamps.
- An easily inspected mesh type filter will be required close to the water intake. The filter has to be of 50 microns. It is possible to use filters from existing outlets.
- The seawater intake must be at least 3/4" size.
- Downstream the seawater intake must be installed a strainer and a non-return valve. The water flow inhaled by the watermaker is about 6 lit/min.

Mesh Filter		
Pre existing strainer)	In case of pre-existing mesh filter, it is possible to use it as long as the following conditions are met: • Flow rate capacity of the filter is adequate to the whole intakes it serves. • No air is collected in the filter	Filtration grade of the strainer is **50 mesh.**

INSTALLATION NOTES

The filter has to be connected next to the through-hull fittings, and must be easily accessible for inspection.

4.3.3 Fresh water intake for washing

Fresh water intake for washing	Tee in downstream of the vessel's fresh water pressure system. The following conditions must be respected: • The flow of the existing fresh water pump must be **min 6 lit/min.** • Flushing must always be performed with the pressure water system ON.	***Min. flow rate must be 6 lit/min. at 1 bar.***

4.3.4 Brine discharge

Salt water discharge	The salt-water drain shall be ½'' minimum size and it has to be preferably above the seawater level.	**Minimum size ½''**
Pre-existing salt water discharge (alternatively)	It is possible to use offtakes from existing apparatuses, provided that: • It is not the engine cooling water drain or apparatuses that drain out water with elevated pressure.	

THE PRESENT MANUAL BELONGS TO - **Schenker Italia** - ALL RIGHTS RESERVED

4.4 Hydraulic connections

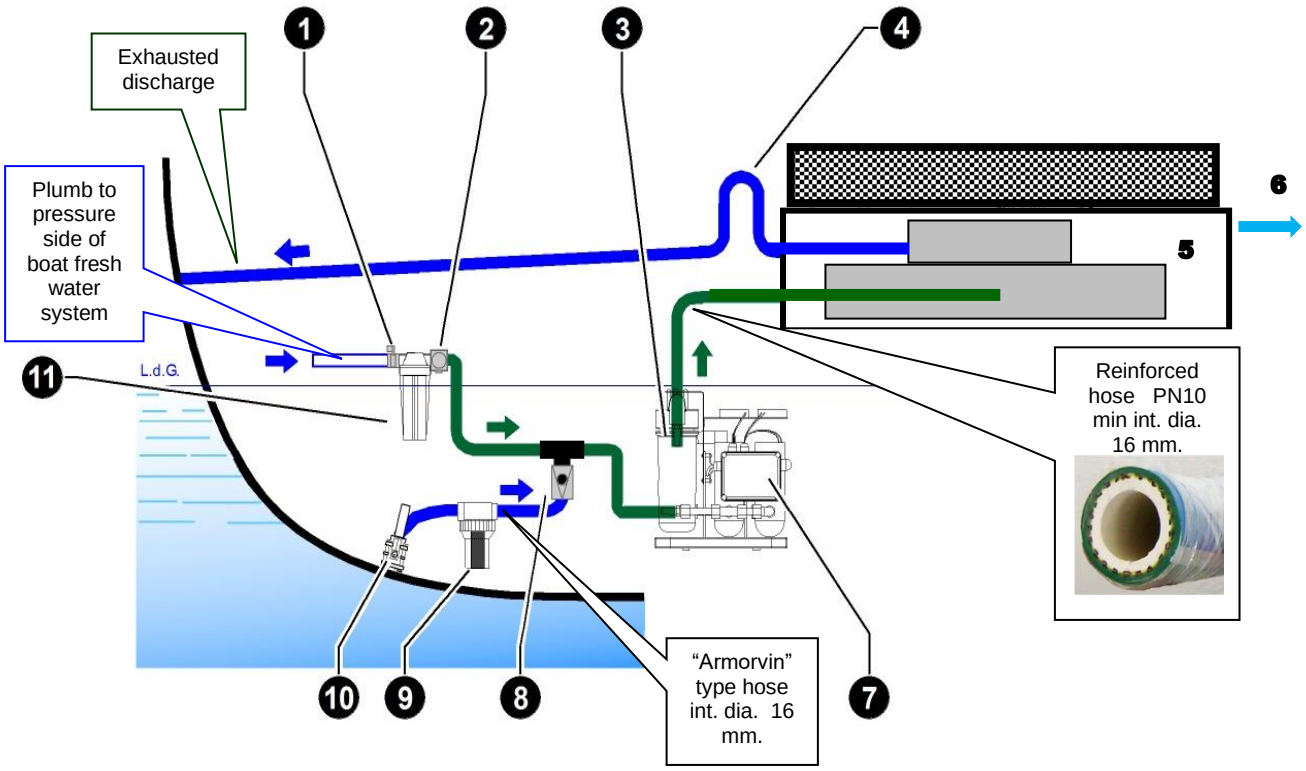

HYDRAULIC CONNECTION AND HOSES
FIG. 4-1

1. Pressurized fresh water valve
2. Elecrovalve
3. 5 micron filter
4. Swan neck upward - Discharge
5. Watermaker
6. Fresh water outlet
7. Pump
8. Non return valve
9. Mesh filter
10. Water inlet
11. Active carbon filter

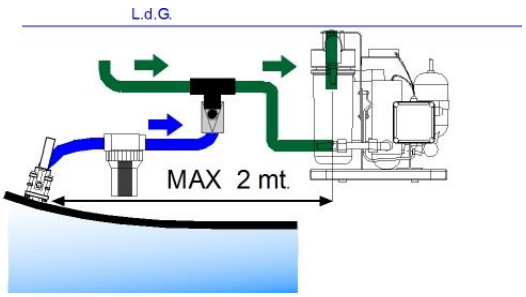

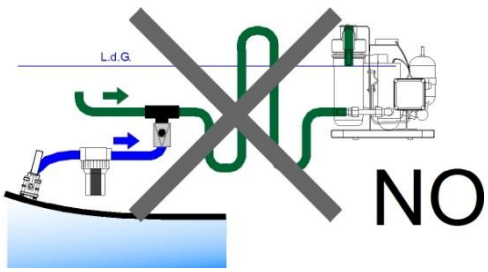

All the hydraulic connections (to exception of the fresh water production) have to be realized with a 16 mm. int. diam. hose and a ½" holder. The hydraulic section that is continuously under consistent pressure is the pump outlet – 5 m. filter – watermaker inlet connections . For this section is necessary to use a good quality **PN 10 min.** reinforced hose. An inadequate hose could burst, jeopardizing seriously the safety of the vessel.

The hydraulic connections are:

Low pressure connections – max 3 bar	• Connection between seawater intake – net filter – non-return valve inlet – pump group	**Armorvin reinforced hose PN6 with 16mm internal diameter**
	• Connection between the discharge of the watermaker – through hull discharge fittings of the vessel	**Armorvin reinforced hose PN6 with 16mm internal diameter**
Medium pressure connections – max 10 bar	• Connections fresh water pressurized system–carbon filter-backflow valve outlet–pump inlet • Connections pump outlet-5 microns filter–watermaker inlet.	**Rubber reinforced hose PN 10 minimum, internal diameter 16 mm.**
Low pressure connections - max 3 bar	• Watermaker - fresh water tank	**¼'' fittings, Small plastic blue hose 6x8mm provided within the scope of supply**

PUMP CONNECTIONS:

Connect the in/out hose to the pump as follows:

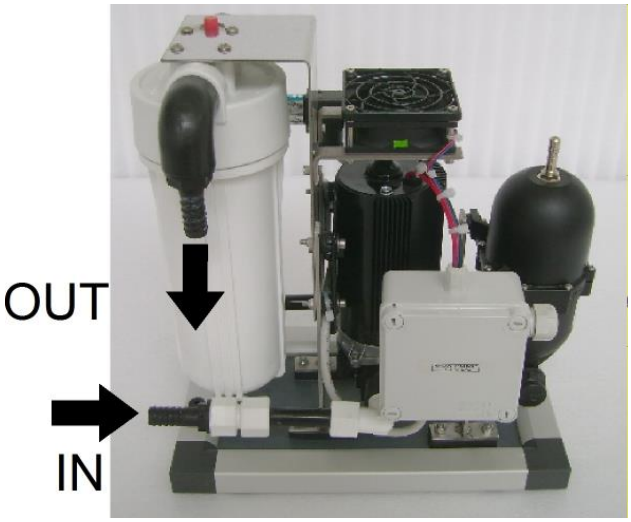

WATERMAKER INTAKE AND DISCHARGE
FIG. 4-2

CAUTION

The pump has to be placed as close as possible to the seawater intake and as low as possible respect to the seawater level; furthermore, it is recommended to avoid long and convoluted path of the connection hoses.

ATTENTION
The use of an improper hose can cause a break which prevent the security of the vessel.

WATERMAKER CONNECTIONS:

WATERMAKER INLET (Sea water inlet from the pump):
Make use of the external holder located on the left side of the watermaker (marked **IN**).

WATERMAKER OUTLET (Discharge outboard):
Make use for this connection of the holder located on top of the pressure amplifier, inside the watermaker unit (marked OUT). Create a Swan neck upward, when the drain outlet on the vessel is positioned below the watermaker unit, in order to guarantee a water head.

PRODUCTION FRESH WATER CONNECTION
The connection has to be made using the small hose supplied with the equipment. The connection has to be made between the polyethylene hose that comes out the watermaker unit (on the right), and the upper side of the tank, on a ¼" outlet if available.
It is possible, in case of metal tanks, to make a ¼" threaded hole to connect the supplied male connector.
Another option is to Tee into the tank air vent hose.There are no particular limits on the connection length.

Another option is to Tee into the tank air vent hose. This is only possible if the breather hose section is more than 16 mm. dia. There are no particular limits on the connection length.

THE PRESENT MANUAL BELONGS TO - **Schenker Italia** - ALL RIGHTS RESERVED

4.5 Electric connections

ATTENTION

These steps have to be performed by a qualified technician/operator, by referring to the electrical drawings provided within this document.

4.5.1 Remote control panel mounting

The remote control panel has the following dimensions:
width 135 mm. height 116 mm.
It can be fixed on any internal vessel panel, provided that the area behind is free of humidity and condense and there is enough depth to house the rear part of the panel (approx. 8 cm.).

The cut to be performed on the vessel covering panel, to encase the remote control panel, has the following dimensions:
width 115 mm. height 97 mm.

The remote control panel can be connected through the pre-wired multiple cable of a 10mt standard length provided. It is possible to adapt the panel to a longer distance by adding a one more cable in series to the one provided.

REMOTE CONTROL PANEL
FIG. 4-3

THE PRESENT MANUAL BELONGS TO - **Schenker Italia** - ALL RIGHTS RESERVED

4.5.2 Electric connections: wires (Smart 30 12/24V DC)

The electric connectors are positioned inside the small electric box connected to the computer box. The power supply, coming from the service batteries, needs to be connected to the terminals – and + . The connection to the vessel panel needs to be performed downstream the voltmeter and the ammeter of the vessel panelboard. The connecting terminal must be suitable to support the plant electric load (approx. 150 Watt). A 16 Ampere automatic circuit breaker for 12V DC systems must be installed on the power supply , while a 10 Ampere for 24VDC systems.

The general wires connection scheme (between the external devices and the main electric box) is the following:

Voltage	**Automatic switch**	**Cable lenght**					
		up to 3 mts		3 - 7 mt.		7-10 mt.	
Volt	Ampere	**mm2**	**AWG**	**mm2**	**AWG**	**mm2**	**AWG**
12	**16**	**4**	**11**	**10**	**7**	**16**	**5**
24	**10**	**2,5**	**13**	**4**	**11**	**4**	**11**

Electric cables and switches selection table.

<u>The connection general diagram is the following:</u>

Clamp	***Position***	***connect to***	***cable section***
-	Pump box	negative battery	see table
+	Pump box	positive battery	see table
-	Pump box	Computer box	2,5 mm2
+	Pump box	Computer box	2,5 mm2
P1	Pump box	Computer box	2,5 mm2
PS	Computer box	Signal pressure switch	2,5 mm2
PS	Computer box	Signal pressure switch	2,5 mm2
EV	Computer box	electrovalve (on the AC filter)	2,5 mm2
EV	Computer box	electrovalve (on the AC filter)	2,5 mm2

<u>Connection between the computer box and remote panel.</u>

Connect the remote panel to the computer box using pre wired cable supplied (standard length 10 mts.)

THE PRESENT MANUAL BELONGS TO - **Schenker Italia** - ALL RIGHTS RESERVED

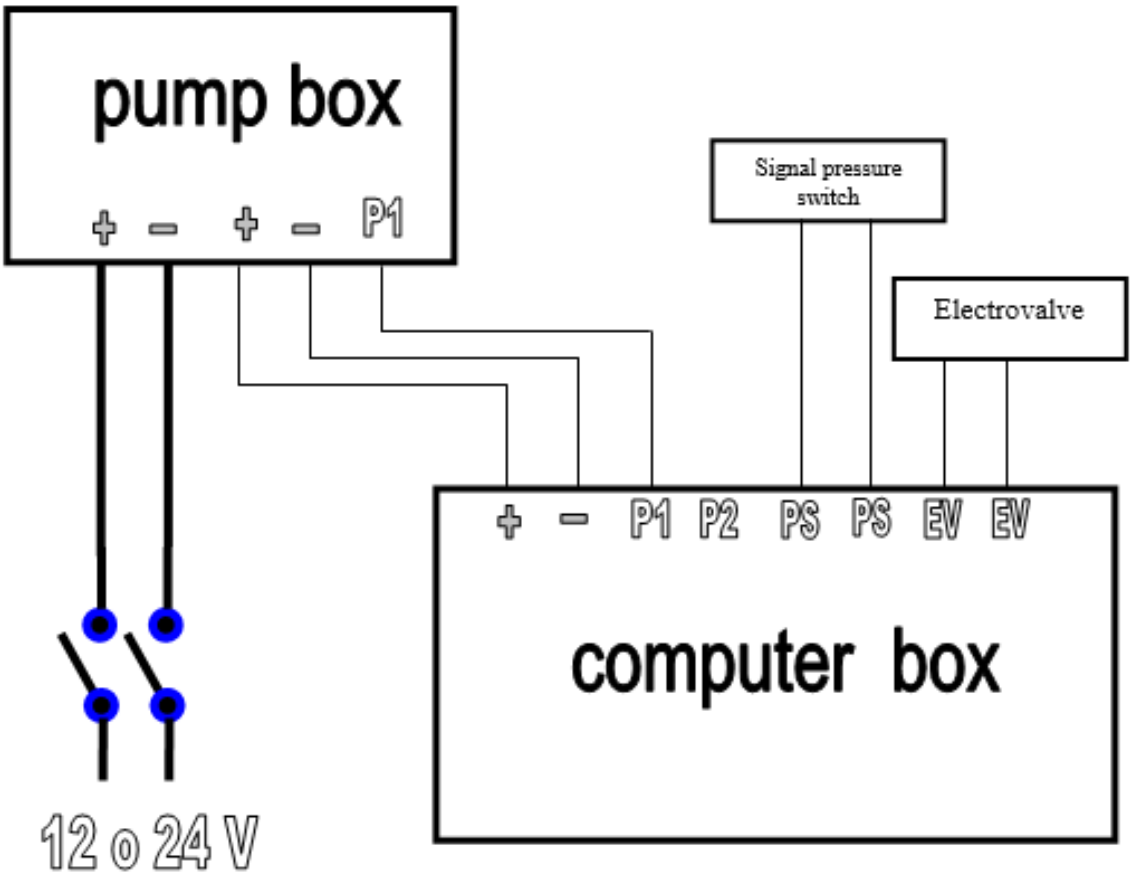

WIRING LOGIC SCHEME12-24 VDC

FIG. 4-4

THE PRESENT MANUAL BELONGS TO - **Schenker Italia** - ALL RIGHTS RESERVED

4.5.3 Electric layout scheme (12/24V DC)

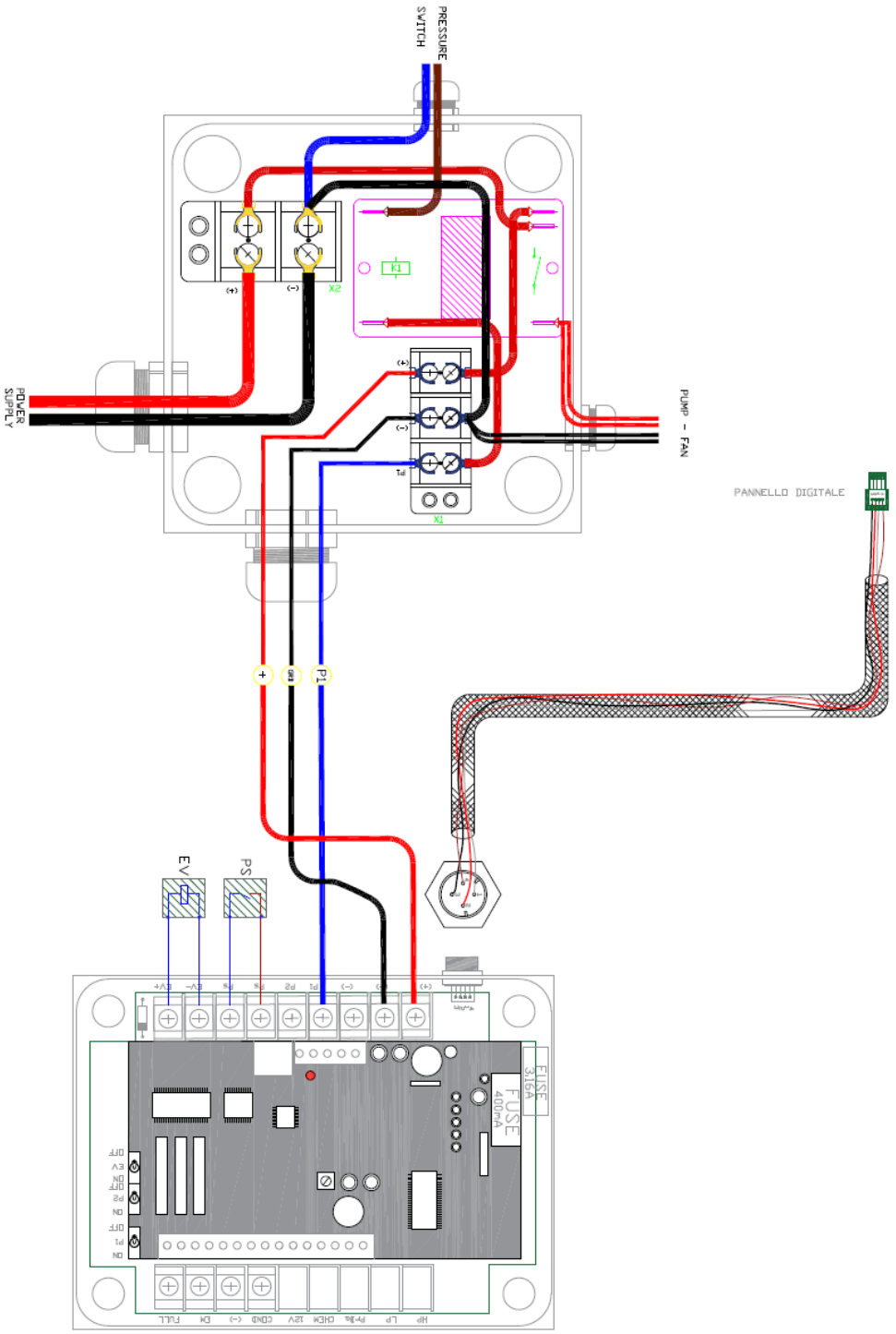

ELECTRIC MAIN BOX SCHEME SMART 30 12/24V DC
FIG. 4-4

THE PRESENT MANUAL BELONGS TO - **Schenker Italia** - ALL RIGHTS RESERVED

5. FUNCTIONING AND USE

5.1 Command description

Remote control panel
Fig. 5.1

KEYBOARD FEATURES
The panel keyboard has 4 push buttons. The display light switches off after 15 minutes of not use. Pushing any button, the display will light again, without activate any other command. The functions of the push buttons are:

START Used to start the system.
If it is pushed shortly the system starts and the unit will run indefinitely until will be pushed STOP.
If it is pushed for at least 3 seconds the system starts, and will stop automatically after the working hours selected with the timer (see menu functions).
It can anyway be stopped before, pushing STOP.
It is used as well to scroll the different options in the single menu.

STOP Used to stop the system.
The system, once pushed STOP, usually doesn't stop suddenly. It awaits the correct positioning of the internal valve (2-3 seconds), and then stops automatically.
If the automatic washing is activated (washing light on), the system, once pushed STOP, will perform the automatic washing (1 min) before stops.
The push button STOP is used as well to exit from the menu function.

WASHING Used to rinse the system automatically with fresh water.
If it is pushed shortly the system will get ready to perform an automatic washing (1 minute long) once the system will be stopped.
If it is pushed for at least 3 seconds the system will just perform a 10 minutes rinsing, without suck up sea water.

MENU Used to enter into the MENU mode and modify some parameters.
Pushing it repeatedly the different MENU options can be scrolled.
On his turn the START push button allows to scroll the different options of the single menu.
The system recognizes the current value without any further command.
The STOP push button allows to exit from the MENU function.

THE PRESENT MANUAL BELONGS TO - **Schenker Italia** - ALL RIGHTS RESERVED

MENU OPTIONS

- *WORKING TIME (timer)*

It allows to select the working time of the watermaker (1-6 hours). The timer is activated if the START button is pushed for more than 3 seconds only.

- *BY-PASS*

It allows to exclude the sensor (signal pressure switch) that detects the correct cycling of the ERS. The operation with the by-pass is necessary <u>only</u> in case of malfunctioning of the signal pressure switch (in example if the system gets blocks, with the message " *SYSTEM BLOCKED*", not as consequence of a real hydraulic problem, but just as consequence of the malfunctioning of the probe).
The bypass is used also during special operation like the shut down procedure (washing with chemicals). The bypass activation is automatically removed after one single production cycle. Don't activate the by-pass if not necessary.

- *AUTOMATIC START-UP*

This function activates automatically the first start up procedure. The procedure is necessary when a new machine is started for the first time, or after the filter cartridge replacement, or a general service. The procedure allows to purge completely the air from the system, and from the seawater and the washing fresh water hoses. The depressurization valve <u>must be opened</u> before start the procedure.

THE PRESENT MANUAL BELONGS TO - **Schenker Italia** - ALL RIGHTS RESERVED

- *PERIODIC WASHING*

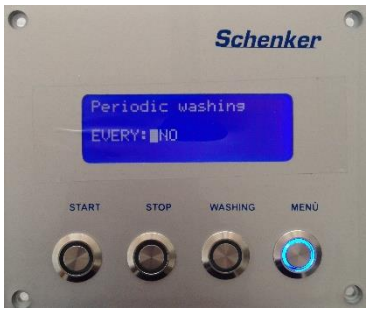

This function allows a periodic automatic rinsing (every 6 up to 10 days) with fresh water. It can be used before long inactivity periods. The single washing operation will last about 1 minute. The consumed fresh water, for every washing, is about 6 liters. Therefore it is suggested to evaluate if the fresh water reservoir is enough for the programmed cycles. Selecting NO, the function will be disabled.
To activate the function select the days (6 to 10), exit from the menu, pushing STOP, and then push WASHING for 3 seconds. The display will indicate the remaining day before the first rinsing. The function is anyway disabled pushing STOP, or after a normal production cycle.

MESSAGES

- SYSTEM STANDBY
  It indicates that the system is ready to be set and started.

- TOTAL HOURS
  It indicates that the total, progressive working time of the watermakers.

- SYSTEM WASHING
  It indicates that the unit is in washing mode (pumps and electrovalve on).

- SYSTEM BLOCKED
  The message must be acknowledged pushing STOP.
  This message means that a hydraulic block of the machine occurred, and then the pump has been switched off as safety procedure. In this case is suggested to perform a reset procedure and investigate on the possible hydraulic origins of the problem.
  If the origin of the problem is just a malfunctioning of the signal pressure switch, it is possible to start again the unit, activating the bypass.

- BYPASS WARNING
  This message advices or remembers that the unit is working in bypass mode (then some safety functions are disabled).

- CHANGE PUMP FILTERS
  This is a blinking message that must be acknowledged pressing the key STOP.
  This messages suggests to replace the filter of the pump group.

Messages related to the salinity meter (optional):

S = wait This means that the salinity meter is still completing calculations.

S = OK Quality of the produced water good (micro Siemens 0-1500)
S = MED Quality of the produced water medium (micro Siemens 1500-2000)
S = BAD Quality of the produced water bad (micro Siemens over 2000).
In this last case, please stop the watermaker and schedule a service.

THE PRESENT MANUAL BELONGS TO - **Schenker Italia** - ALL RIGHTS RESERVED

TIME. It is the time from the starting. If the timer function has been used the time will indicate the remaining time to stop.

5.2 Introduction – by pass mode

The by-pass mode disables the low pressure and the cycling controls. Then the watermaker can work but not in a safe condition, and has to be directly and continuously monitored.

The bypass mode has to be activated only in the following situations:

1. Chemical washing. The by-pass is necessary to avoid low pressure.

2. Probe (signal pressure switch) fault. In this case the system gets an alarm (SYSTEM BLOCKED message) because the probe gives to the controller a false indication, not because a real problem is exsisting. The bypass mode allows the watermaker to by-pass the sensor and work.

CAUTION
Please, avoid to use the bypass mode if not strictly necessary. In this mode all the main electronic controls of the watermaker and automatic sensors are disabled.

5.3 First start-up procedure

The first start-up procedure is necessary to start a new plant for the first time or to restart it after performed a chemical washing.
The purpose of the start-up procedure is to essentially purge the air contained in the system.

5.3.1 Preliminary checks before proceeding with the start-up procedure

Please, be sure to perform all the following checks before proceeding with the start-up procedure:
1. Verify that all plant components are connected correctly.
2. Verify the 5 micron is installed correctly.
3. Be sure the seawater inlet valve and salt water drain valve are opened (If existing).
4. Be sure the reset valve is closed (lever orthogonal to the body valve) and the positioner completely unscrewed.
5. Be sure the fresh water pressurizing pump of the vessel is on.
6. Be sure the valve on the active carbon filter is opened.
7. Be sure the fresh water tank is full enough (at least 30lt) to perform washing procedure.

THE PRESENT MANUAL BELONGS TO - **Schenker Italia** - ALL RIGHTS RESERVED

5.3.2 Start-up

1. Open the depressurization valve (lever horizontal)	
2. Push for 20-30 sec the red button on the active carbon filter housing cup in order to purge the air from the system.	
3. Activate the start-up procedure through the function of the MENU (select the specific function in the menu mode, exit from menu mode pushing STOP, and start the procedure pushing START).	
4. Close the depressurization valve when the display shows the specific message and wait for the completion of the procedure.	

The procedure lasts about 3 minutes, and it can be stopped at any time pushing STOP. After completed the procedure the system is ready to start normally.

THE PRESENT MANUAL BELONGS TO - **Schenker Italia** - ALL RIGHTS RESERVED

5.4 Normal operating procedure

Please, be sure to perform all the following checks before proceeding normal operating procedure:

1. Be sure the reset valve is closed (lever orthogonal to the body valve) and the positioner completely unscrewed.
2. Be sure the depressurization valve is closed.

5.4.1 Normal operating procedure with final flushing (recommended)

1. Push shortly the button START. The controller will open the electrovalve, helping the inlet pump hose to get filled with water. After 5 seconds the controller starts the pump. The display will show the increasing production time. 2. **Select WASHING**, pushing shortly the related push button. 3. Push the Stop button to stop the unit after the working cycle. The system will start the washing procedure, and then will stop automatically after around 1 minute. The fresh water consumed for the automatic washing is about 6 lt.	

5.4.2 Normal operating procedure with timer and final flushing

1. Select the needed timing (1 to 6 hours) through the specific timer within the menu option (the system will hold as well the previous setting.) 2. Push the button START for more than 3 seconds. 3. Select the WASHING option pushing shortly the push button. The display will show the decreasing production time. The system will stop when the selected time is reached, and then will perform the automatic washing. However, the system can be stopped at any time by pushing STOP.	

THE PRESENT MANUAL BELONGS TO - **Schenker Italia** - ALL RIGHTS RESERVED

NOTE

It could occur that the system doesn't stop immediately when stop button is pushed, but it rather stops after a while. This behaviour is absolutely normal because the electronic central unit waits for the hydraulic clock signal before switching off in order to avoid hydraulic system block.

CAUTION

If during normal running operation the computer detects an irregular condition (not constant cycling, low pressure, etc…) the system switches off automatically after 20 sec, and STOP led will start flashing. To make watermaker run again, it is first necessary to press STOP button (in order give a feedback to the system that the issue has been recognized). Before pressing START to run the watermaker again, be sure to individuate the cause of the anomaly and solve the issue.

5.4.3 Single washing operation

To perform a single washing operation, which flushes the system with fresh water for around 10 minutes in order to avoid membranes to remain full of salt for long time, it is necessary to push the WASHING button for more than 3 seconds.
The display will indicate the remaining time. It is possible to stop the operation at any time by pushing STOP.

5.4.4 Periodic washing

In order to program a periodic washing, which let the system rinsing automatically with a desired frequency, please follow the instruction below:

- Select the days (between 6 and 10) in the "periodic washing" option within the menu
- Exit from the menu by pushing STOP button
- Push the WASHING button for 3 seconds

NOTE

In case the power supply is removed, it is necessary to set again the parameter.

THE PRESENT MANUAL BELONGS TO - **Schenker Italia** - ALL RIGHTS RESERVED

5.5 Reset procedure

If the watermaker gets air (or if some other problems occur), the automatic hydraulic valve may stop in a central position. This means that the working pressure goes up suddenly. After approx. 20 sec. the computer recognizes the problem, turn off the pumps, and the “SYSTEM BLOCKED” message starts flashing.

In this case is necessary to reset the valve with the following simple procedure:

1. Turn off the system 2. Open the reset valve (lever in horizontal position).	
3. Open the depressurization valve.	
4. Screw the positioner know clockwise until it can be moved no further. Normally 10 turns at least are needed.	
5. Unscrew the positioner knob counterclockwise up to the original position, until when it is blocked back.	
6. Close the reset valve (lever in vertical position).	

THE PRESENT MANUAL BELONGS TO - **Schenker Italia** - ALL RIGHTS RESERVED

7. Restart the system	
8. After some seconds close the depressurization valve.	

THE PRESENT MANUAL BELONGS TO - **Schenker Italia** - ALL RIGHTS RESERVED

6. MAINTENANCE (ROUTINE AND SPECIAL)

6.1 Check filter cleanliness

It is very important to inspect filters condition periodically.
The following filters are present in the system:

1. Mesh filter (strainer)
2. Pump filter (5 micron cartridge filter)
3. Active carbon filter

follow the instructions given in the table below:

OPERATION	FREQUENCY	PROCEDURE
Check and cleaning of the strainer	Every 5 days	**Visual inspection and washing**
Replacing of the 5 micron cartridge filters	It depends on the real working condition and the turbidity of the sea water. In average conditions the replacement of the cartridge is recommended every 100-120 working hours. Once replaced the filters it is necessary to purge the air from the system, opening for 2-3 minutes the depressurization valve.	**Unscrew the filter housing cup counter clockwise by using the specific key provided**
Replace the active carbon fiber filter	Once per year	**Unscrew the filter housing cup counter clockwise by using the specific key provided**

THE PRESENT MANUAL BELONGS TO - **Schenker Italia** - ALL RIGHTS RESERVED

Purge air from the system periodically by opening for 2-3 minutes the depressurization valve at 45°.	Every 15-20 days	

6.2 Check the plant working pressure

It is necessary to read the pressure on the manometer located on the equipment front panel in order to perform this verification. The working pressure depends on many factors such as water temperature, salinity level of seawater, effective batteries voltage, membranes cleaning degree, typology of installation. The pressure, in normal working conditions, is approx. 6 -7 Bars. There is a small pressure drop, in the range of 0,2 bar, during the cycle.	

If the average pressure exceeds the above ranges it is necessary to check the membranes cleaning degree. It is necessary to perform the shutdown procedure if the membranes result dirty. If cleaning also results insufficient it could be necessary to perform an alkaline washing using the chemical product SCHENKER CLEANING 2 (SC2). It is recommended to contact a Schenker certified service center.

6.3 Check for leaks

It is necessary to perform this verification at every plant start-up and however often, since possible leaks due to accidental causes (hose bursting, hose clamp loosening, equipment failure, etc.) may occur, even plentiful, with the consequence of possible damages.

6.4 Check for membranes replacement

The reverse osmosis membranes have a 7 years average working life. It is recommended therefore, after 5 years of operation, to verify the possible necessity of substitution and however to perform the substitution after 7 years.

6.5 Shutdown procedure

It is necessary to perform the shutdown procedure before standstills longer than 3 months, for instance before the winter laying up.
The purpose of the shutdown is to flush the system from possible organic and inorganic sediments, and inhibit the growth of bacteria that could reduce the reverse osmosis membranes efficiency.

THE PRESENT MANUAL BELONGS TO - **Schenker Italia** - ALL RIGHTS RESERVED

6.5.1 Necessary Equipment

The following equipment is necessary to perform the shutdown operation:

1. 1 tank of fill with at least 15 lit of fresh water.
2. 2 hoses to be connected to:
   - inlet of the pre-pump
   - discharge of the watermaker
3. A bottle of powder **SCHENKER CLEANING 1 (SC1)**. The solution must be prepared following the instruction indicated on the product label, and **using chlorine free water** (water produced by the system can be an option).
4. Tools for dismounting the system's hoses (screwdrivers, pliers, etc.)

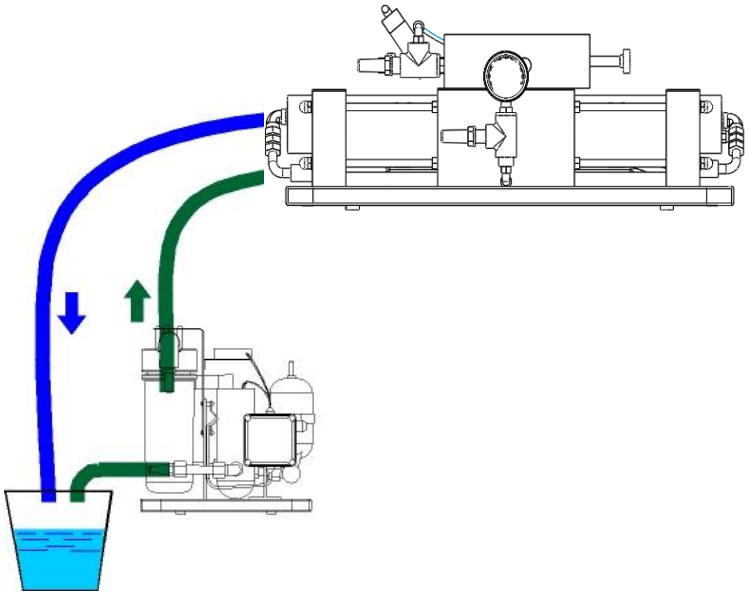

HYDRAULIC SCHEME FOR SHUTDOWN PROCEDURE
FIG. 6-1

NOTE

The available products for the shutdown procedure are the following:
1) SCHENKER CLANING 1 (SC1 – Acid product) to remove the inorganic components and preserve the watermaker during winter break
2) SCHENKER CLEANING 2 (SC2 – Alkaline product) to remove the organic components (mould and bacteria) when already deposited; in this case the system becomes stinky.
Whether the system needs acid or alkaline cleaning will depend on the type of foulant suspected. However, both are needed and it is recommended to start with the alkaline cleaning then follow with the acid cleaning after the system has been flushed.

NOTE

Normally only SC1 is required, but in case of strong smell it is recommended to use also the SC2.
The sequence in this case will be SC2 first, then a washing of the system. Finally the SC1, then again washing of the system.
It is advisable to replace the filters after performing shutdown procedure with new ones.

THE PRESENT MANUAL BELONGS TO - **Schenker Italia** - ALL RIGHTS RESERVED

6.5.2 Shutdown operating procedure

1. Prepare the solution carefully mixing the bottle of SC1 in about 15 lit of unchlorinated water.	
2. Connect the 2 hoses to the pre-pump and watermaker as indicated above, and dip them in the solution.	
3. Check they are well dipped in the solution and don't inhale air.	**Pipes under the free water surface** 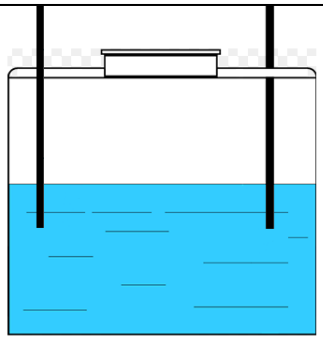
4. Open the depressurization valve (turn counter clockwise).	

THE PRESENT MANUAL BELONGS TO - **Schenker Italia** - ALL RIGHTS RESERVED

5. Start the watermaker with the bypass activated.	
6. Leave the unit running for approx. 20 minutes, checking that the hoses are properly positioned in the recipient, so that to avoid inhaling air.	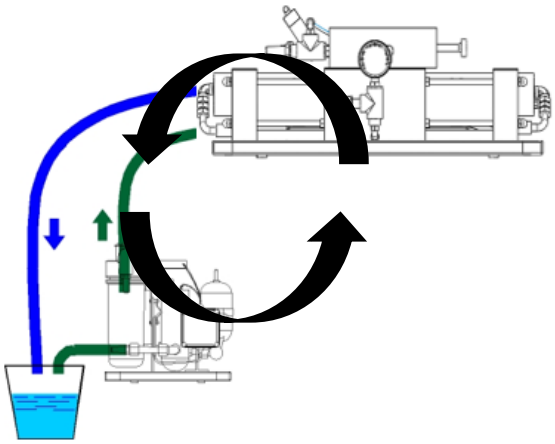
7. Shut the plant off and connect the original hoses.	

CAUTION

It is necessary to perform the first start-up procedure when restarting the plant after a shutdown procedure, in order to purge the air and drain out board the chemicals in the systems.

THE PRESENT MANUAL BELONGS TO - **Schenker Italia** - ALL RIGHTS RESERVED

6.6 Antifreeze procedure (Winterizing procedure in cold climate - under 5°C)

It is recommended to first perform the normal shutdown procedure by using SC1 in order to clean the system properly and prevent bacteria growth and inorganic material deposit.
After this operation, Then the system must be flushed and filled with an antifreeze.
The recommended antifreeze product is a solution of **propylene glycol and unchlorinated water**.
The ideal concentration of propylene glycol is

- 45% (for temperatures up to - 20°)
- 55% (for temperatures up to - 30°).

ATTENTION
Do not use ethylene glycol as this substance is toxic and non-degradable.

The total volume of the solution must be about 15 lit.

The procedure is similar to that used for chemical washing with SC1 and SC2 products:

1. Prepare the solution carefully mixing the propylene glycol with 15 lit of unchlorinated water by following the concentration suggested above.
2. Disconnect the drain hose and the pumps suction hose.
3. Connect two hose pieces to the drain and to the pump suction.
4. Insert the end side of the hoses into the bucket, verifying that the hoses have been properly dipped in the solution and that they don't inhale air.
5. Open the depressurization valve.
6. Start the watermaker with the by-pass activated.
7. Leave the unit running for approx. 15/20 minutes, checking that the hoses are properly positioned in the recipient, so that to avoid inhaling air or spilling the liquid into the vessel.
8. Shut the plant off and connect the original hoses taking care of not empty the system daring out the solution.

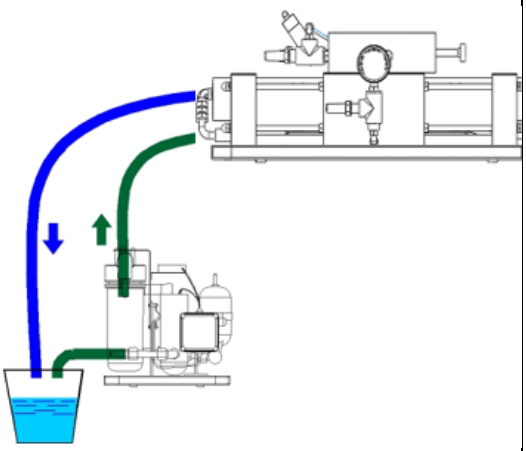

HYDRAULIC SCHEME FOR WINTERIZING PROCEDURE
FIG. 6-2

ATTENTION
It is necessary to perform the first start-up procedure when restarting the plant after a shutdown procedure, in order to purge the air and drain out board the chemicals in the systems.

Before proceeding with any kind of service it is strongly recommended to read carefully the instruction contained in this manual.

THE PRESENT MANUAL BELONGS TO - **Schenker Italia** - ALL RIGHTS RESERVED

6.7 Periodic maintenance

6.7.1 Membrane replacement

Reverse osmosis membranes have an average lifetime of about 7 years If correctly maintained. It is anyway recommended to check the efficiency of the membranes after 5 years of functioning and verify the needed of a replacement. Please, refer to a certified Schenker service center for this operation.

6.8 Adjustments

Pump high pressure switch The main pump is equipped with a high pressure switch set at around 9,5 Bar. The pressure switch can be calibrated with a screwdriver. To calibrate the pressure switch pull out the plug, remove the security nut, and engage the small internal screw with a small screw driver. Turning clockwise the calibration of the pressure switch increases, while turning anticlockwise the calibration decreases.	
Accumulator It is a reservoir of air that has the function of damping the pressure oscillations during the commutations of the watermaker. The accumulator is factory loaded at a pressure of about 4 bar. The charge level must be periodically checked in order to guarantee a correct functioning to the watermaker.	

THE PRESENT MANUAL BELONGS TO - **Schenker Italia** - ALL RIGHTS RESERVED

7. TROUBLESHOOTING

7.1 Troubleshooting chart

Issue	Cause	Remedy
Pump doesn't start	Pump pressure switch disconnected or burned Electronic issue	Restore or replace the pump pressure switch Activate the by-pass
Pump starts but the system suddenly blocks in high pressure	Hydraulic block Dirty filters Obstruct membranes Commutation system block	Perform reset procedure Replace filters Perform washing procedure Contact a customer service
During operation, the pump temporarily switches off, giving rise to a start and stop phenomenon	Pump pressure switch not correctly set Dirty filters or membranes	Set pump pressure switch (see pag.47) Clean or replace
Metal noise of the pump	Pump cavitation	Check the causes of the absence of water flow at the pre-pump inlet
Low production / normal or low pressure	Low battery Air within the system Loss of sealing systems	Check battery charge Purge the air out of the system Contact a customer service
Low production / high pressure (> 9 Bar)	Clogged filters Clogged membranes Cold inlet water	Replace filters Perform washing procedure Contact a customer service
Loss in the system	Loose fittings ERS leaks	Tighten fittings Contact a customer service

THE PRESENT MANUAL BELONGS TO - **Schenker Italia** - ALL RIGHTS RESERVED

7.2 Electronic issues and their solution

- **Pressing the start button the system starts but goes into alarm after about 25 seconds.**

Check if the watermaker is in hydraulic block (pressure indicated by the pressure gauge above 9-10 bar and pump start/stop continuosly). In this case, carry out the reset procedure indicated in the manual and restart the system.

- If still the system does not start (it goes on the block after about 20 seconds), activate the system manually by inserting the bypass.
- If the system works correctly (normal pressure/normal output) it could be just a probe issue. In this case disconnect the 2 cables of the pressure switch from the PCB of the controller, then connect the 2 cables to a meter in ohm position. The pressure switch must give, under normal conditions, a closing signal followed by an opening signal, every 3-4 seconds. If the signal is always open or always closed, the pressure switch must be replaced.

THE PRESENT MANUAL BELONGS TO - **Schenker Italia** - ALL RIGHTS RESERVED

8. SUGGESTED SPARE PARTS

8.1 Short term cruising

For short term cruising it is advisable to have onboard a cleaning kit (one SC1 and one SC2 cleaning product) as well as one 5 micron cartridge filter. Other additional spares are listed below with their codes:

Spare part name	Code
SC1 WASHING PRODUCT	SC1
SC2 WASHING PRODUCT	SC2
CLEANING KIT (SC1+SC2)	CK
5 MICRON CARTRIDGE 9 ¾"	F5
ACTIVE CARBON FILTER CARTRIDGE	CA

8.2 Long term cruising

For long term cruising it is advisable to have onboard a cruising kit (three 5 micron cartridge filter, one active carbon filter, one cleaning kit) and a signal pressure switch. Other additional spares are listed below with their codes:

Spare part name	Code
SC1 WASHING PRODUCT	SC1
SC2 WASHING PRODUCT	SC2
CRUISING KIT	CRK136
SPARE PUMP SM-MOD 30/60 12V	SP36/12
SPARE PUMP SM-MOD 30/60 24V	SP36/24
MEMBRANE 2521	M2521
PORTABLE SALINITY TESTER	PST
SIGNAL PRESSURE SWITCH SMART 30/60/100	PSSS361
PUMP PRESSURE SWITCH 30/60	PSP36
SPARE SEALS KIT 2.0	SS36-2.0

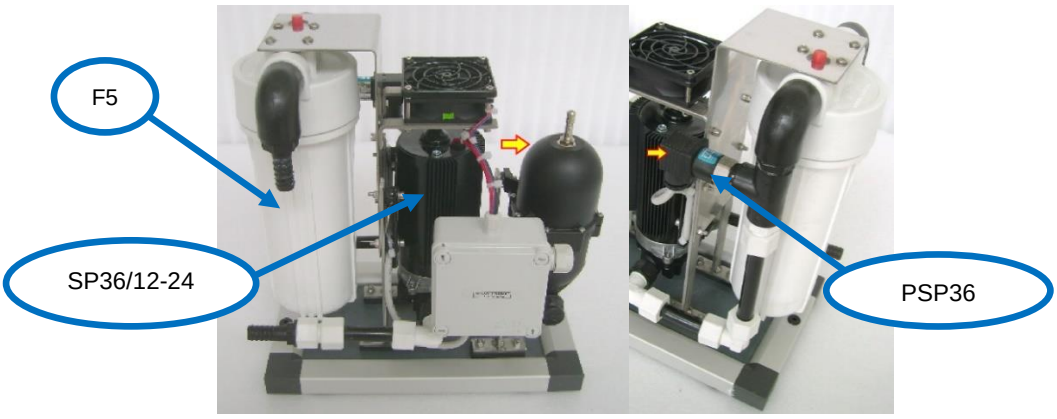

THE PRESENT MANUAL BELONGS TO - **Schenker Italia** - ALL RIGHTS RESERVED

8.3 ERS spare parts

N°	DESCRIPTION	Code
1	CENTRAL SECTION BOTTOM PARTS ERS 30_60_80	CCE368
2	MAIN ROD 30_60_80	MRD36
3	CYLINDER END CUP OPEN 30_60_80	CEC/0368
4	PISTON 30_60_80	PST36
5	CARBON FIBRE CYLINDER 30_60_80	CYL36
6	CARBON FIBRE BOTTOM PIPE 30_60_80	CYC
7	CYLINDER END CUP BLIND 30_60_80	CEC36
8	VALVE ROD	VRD
9	RIGHT VALVE 30_60_80_100	RV
10	LEFT VALVE 30_60_80_100	LV
11	CENTRAL VALVE 30_60_80	CV-S36
12	VALVE PISTONS KIT 30_60_80_100	VPK2.0
13	ERS NON RETURN VALVE KIT 30_60_80	ENRV36

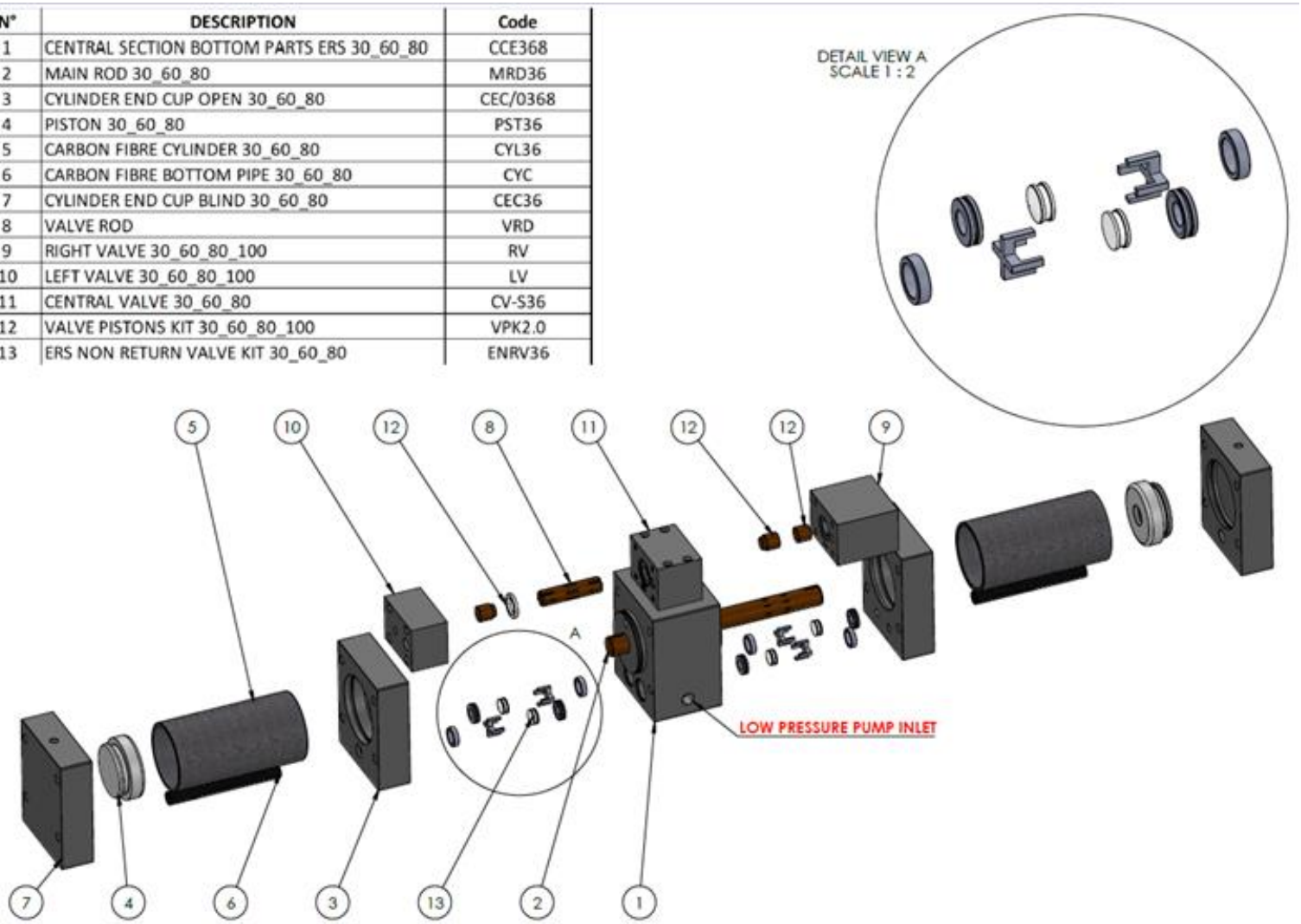

THE PRESENT MANUAL BELONGS TO - **Schenker Italia** - ALL RIGHTS RESERVED

8.4 Additional spares

For extraordinary maintenance intervention that might become necessary in order to ensure the normal operating condition of the watermaker, other common spares are listed below with relative images and codes:

Spare part name	Code
COUPLE HIGH PRESSURE HOSE SM 30/60/80	HPH
END CUP VESSEL 2,5” SINGLE CONNECTION	EV2,5
END CUP VESSEL 2,5” DOUBLE CONNECTION	EV2,5-2
MANOMETERS 0-16	M16B

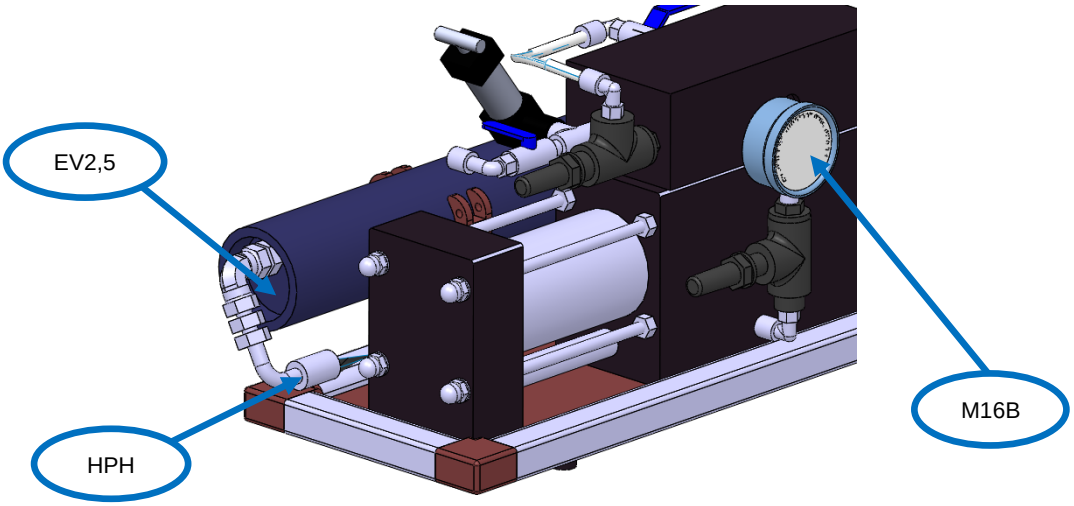

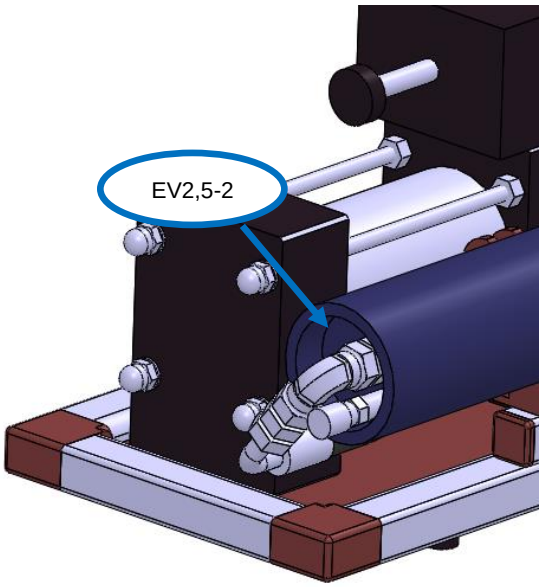

THE PRESENT MANUAL BELONGS TO - Schenker Italia - ALL RIGHTS RESERVED